Bảng thông số sản phẩm

Thông số kỹ thuật

Green Premium™

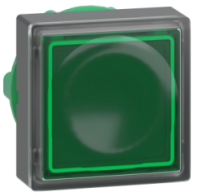

Head for illuminated push button, Harmony XB5, green square square flush, 22mm, universal LED, for insertion of legend

ZB5CW333

Ngừng sản xuất

Ngừng sản xuất vào: 23 thg 1, 2021

Main

Range Of Product	Harmony XB5
Product Or Component Type	Head for illuminated push-button
Device Short Name	ZB5
Product Compatibility	Universal LED
Bezel Material	Dark grey plastic
Mounting Diameter	22 mm
Sale Per Indivisible Quantity	1
Head Type	Standard
Shape Of Signaling Unit Head	Square
Type Of Operator	spring return
Operator Profile	Green flush, unmarked
Operator Additional Information	For insertion of legend

Complementary

Cad Overall Width	30 mm
Cad Overall Height	30 mm
Cad Overall Depth	30 mm
Net Weight	0.023 kg
Resistance To High Pressure Washer	7000000 Pa at 55 °C, distance : 0.1 m
Mechanical Durability	10000000 cycles
Main Group	Illum push-button
Group Of Product	Flush push with inser of legend
Station Name	XALD 1...5 cut-outs XALK 2...5 cut-outs
Cap/Operator Or Lens Colour	Green
Marking	Unmarked
Electrical Composition Code	M1 for <6 contacts using single blocks in front mounting with integral LED M2 for <6 contacts using single and double blocks in front mounting with integral LED M6 for <2 contacts using single blocks in front mounting with integral LED and transformer M10 for <2 contacts using single blocks in front mounting with integral LED MF1 for <2 contacts using single blocks in front mounting with integral LED MR1 for <2 contacts using single blocks in rear mounting with integral LED

Miễn trừ trách nhiệm: Tài liệu này không nhằm thay thế và không được sử dụng để xác định tính phù hợp hoặc độ tin cậy của các sản phẩm này cho các ứng dụng người dùng cụ thể

Device Presentation	Basic element

Environment

Protective Treatment	TC
Ambient Air Temperature For Storage	-40…70 °C
Ambient Air Temperature For Operation	-40…70 °C
Overvoltage Category	Class II conforming to IEC 60536
Ip Degree Of Protection	IP66 conforming to IEC 60529
Nema Degree Of Protection	NEMA 13 NEMA 4X
Ik Degree Of Protection	IK05 conforming to EN 50102
Standards	EN/IEC 60947-5-4 GB 14048.5 EN/IEC 60947-1 JIS C8201-5-1 CSA C22.2 No 14 EN/IEC 60947-5-1 UL 508 JIS C8201-1
Product Certifications	DNV LROS (Lloyds register of shipping) BV UL listed CSA GL
Vibration Resistance	5 gn (f= 2…500 Hz) conforming to IEC 60068-2-6
Shock Resistance	30 gn (duration = 18 ms) for half sine wave acceleration conforming to IEC 60068-2-27 50 gn (duration = 11 ms) for half sine wave acceleration conforming to IEC 60068-2-27

Packing Units

Unit Type Of Package 1	PCE
Number Of Units In Package 1	1
Package 1 Height	4.0 cm
Package 1 Width	5.0 cm
Package 1 Length	3.0 cm
Package 1 Weight	20.0 g
Unit Type Of Package 2	S03
Number Of Units In Package 2	200
Package 2 Height	30 cm
Package 2 Width	30 cm
Package 2 Length	40 cm
Package 2 Weight	4.411 kg

Contractual warranty

Warranty	18 months

Bền vững

Nhãn **Green Premium™** là cam kết của Schneider Electric trong việc cung cấp sản phẩm với hiệu suất môi trường tốt nhất. Green Premium cam kết tuân thủ các quy định mới nhất, minh bạch về tác động môi trường, cũng như các sản phẩm tuần hoàn và CO_2 thấp.

Hướng dẫn đánh giá tính bền vững của sản phẩm là tài liệu kỹ thuật phổ thông giúp làm rõ các tiêu chuẩn nhãn sinh thái toàn cầu và cách diễn giải việc khai báo môi trường.

Tìm hiểu thêm về Green Premium >

Hướng dẫn đánh giá về sự bền vững của sản phẩm >

Minh bạch RoHS/REACh

Hiệu suất sức khoẻ

- Reach Free Of Svhc
- Toxic Heavy Metal Free
- Mercury Free
- Rohs Exemption Information — Yes

Chứng nhận & Tiêu chuẩn

Reach Regulation	REACh Declaration
Eu Rohs Directive	Pro-active compliance (Product out of EU RoHS legal scope) EU RoHS Declaration
China Rohs Regulation	China RoHS declaration
Environmental Disclosure	Product Environmental Profile
Circularity Profile	End of Life Information

Dimensions Drawings

Dimensions

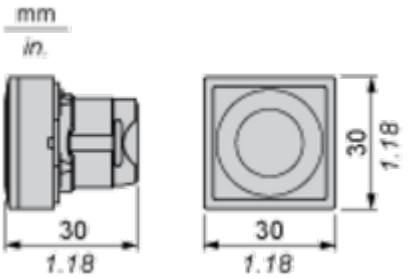

Mounting and Clearance

Panel Cut-out for Pushbuttons, Switches and Pilot Lights (Finished Holes, Ready for Installation)

Connection by Screw Clamp Terminals or Plug-in Connectors or on Printed Circuit Board

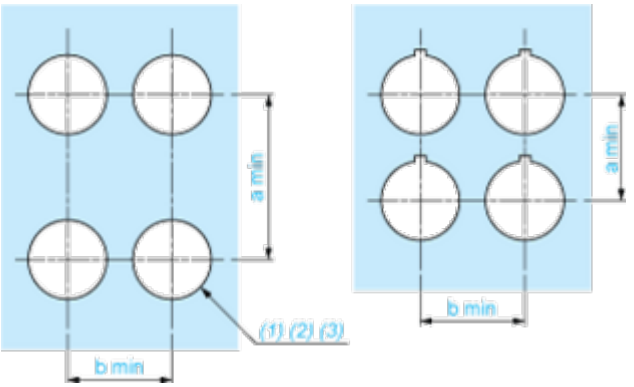

(1) Diameter on finished panel or support
(2) For selector switches and Emergency stop buttons, use of an anti-rotation plate type ZB5AZ902 is recommended.
(3) Ø22.5 mm recommended (Ø22.3 $_{0}^{+0.4}$) / Ø0.89 in. recommended (Ø0.88 in. $_{0}^{+0.016}$)

Connections	a in mm	a in in.	b in mm	b in in.
By screw clamp terminals or plug-in connector	40	1.57	30	1.18
By Faston connectors	45	1.77	32	1.26
On printed circuit board	30	1.18	30	1.18

Detail of Lug Recess

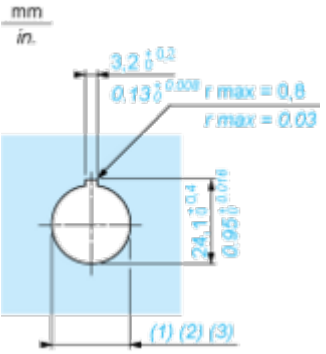

(1) Diameter on finished panel or support
(2) For selector switches and Emergency stop buttons, use of an anti-rotation plate type ZB5AZ902 is recommended.
(3) Ø22.5 mm recommended (Ø22.3 $_{0}^{+0.4}$) / Ø0.89 in. recommended (Ø0.88 in. $_{0}^{+0.016}$)

Pushbuttons, Switches and Pilot Lights for Printed Circuit Board Connection

Panel Cut-outs (Viewed from Installer's Side)

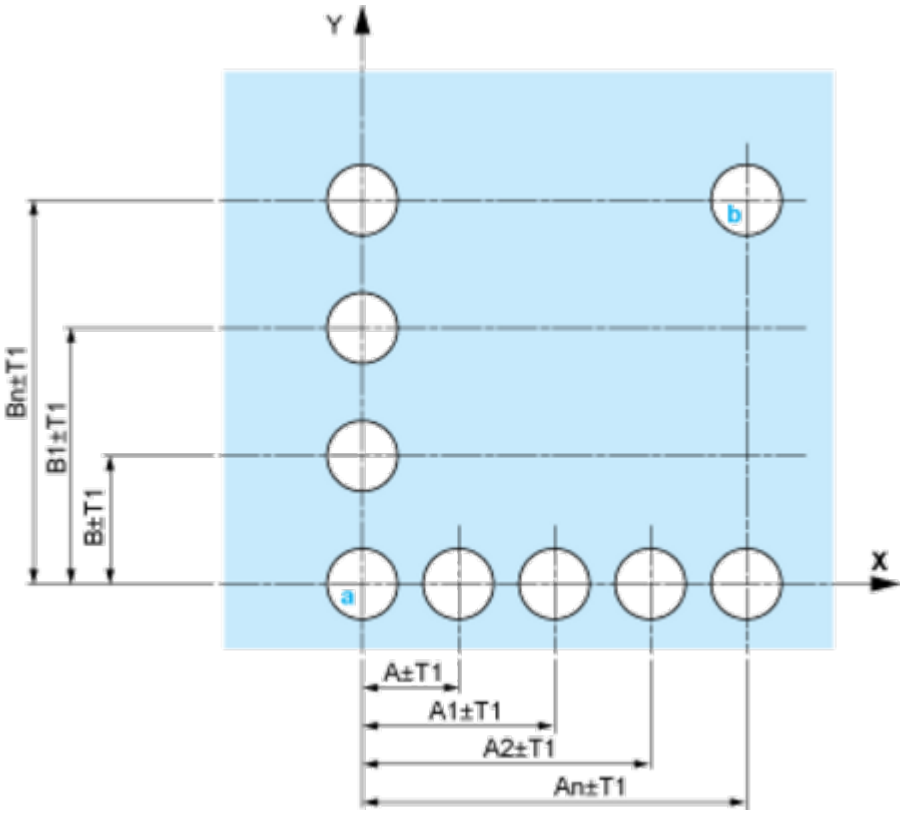

A: 30 mm min. / 1.18 in. min.
B: 40 mm min. / 1.57 in. min.

Printed Circuit Board Cut-outs (Viewed from Electrical Block Side)

Dimensions in mm

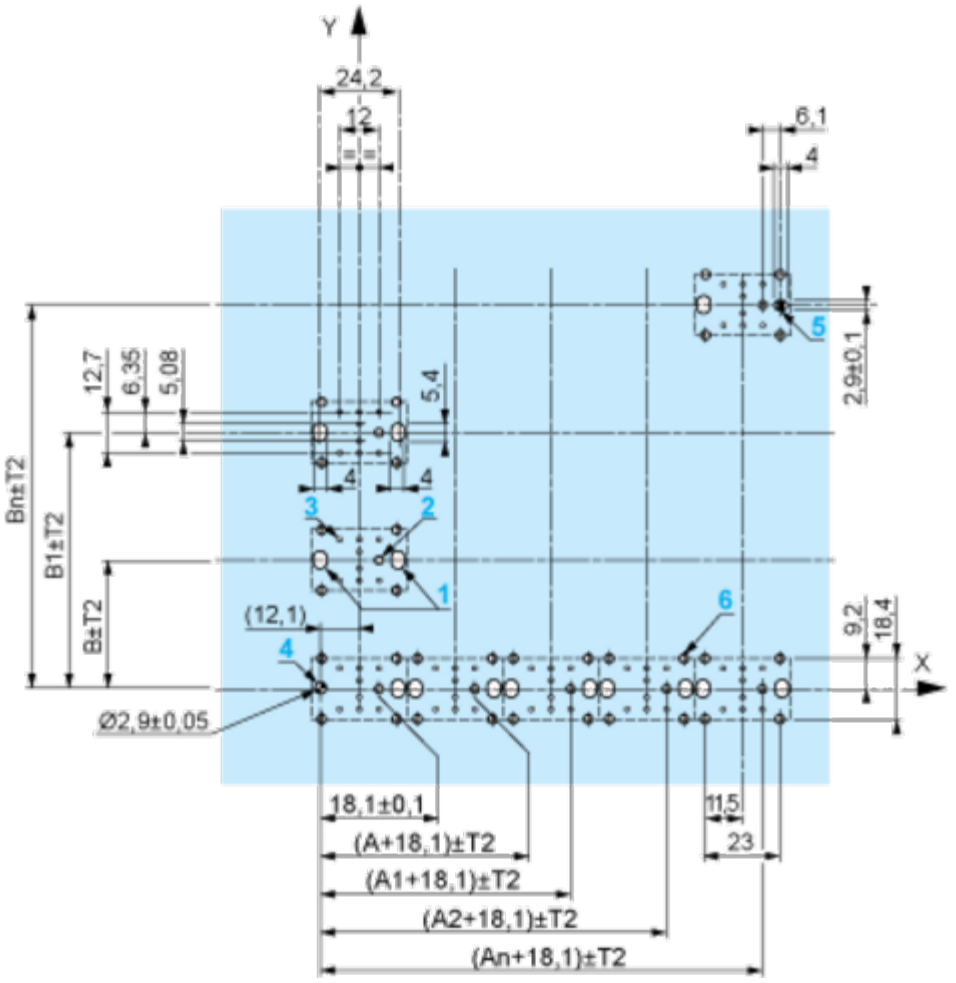

A: 30 mm min.
B: 40 mm min.
Dimensions in in.

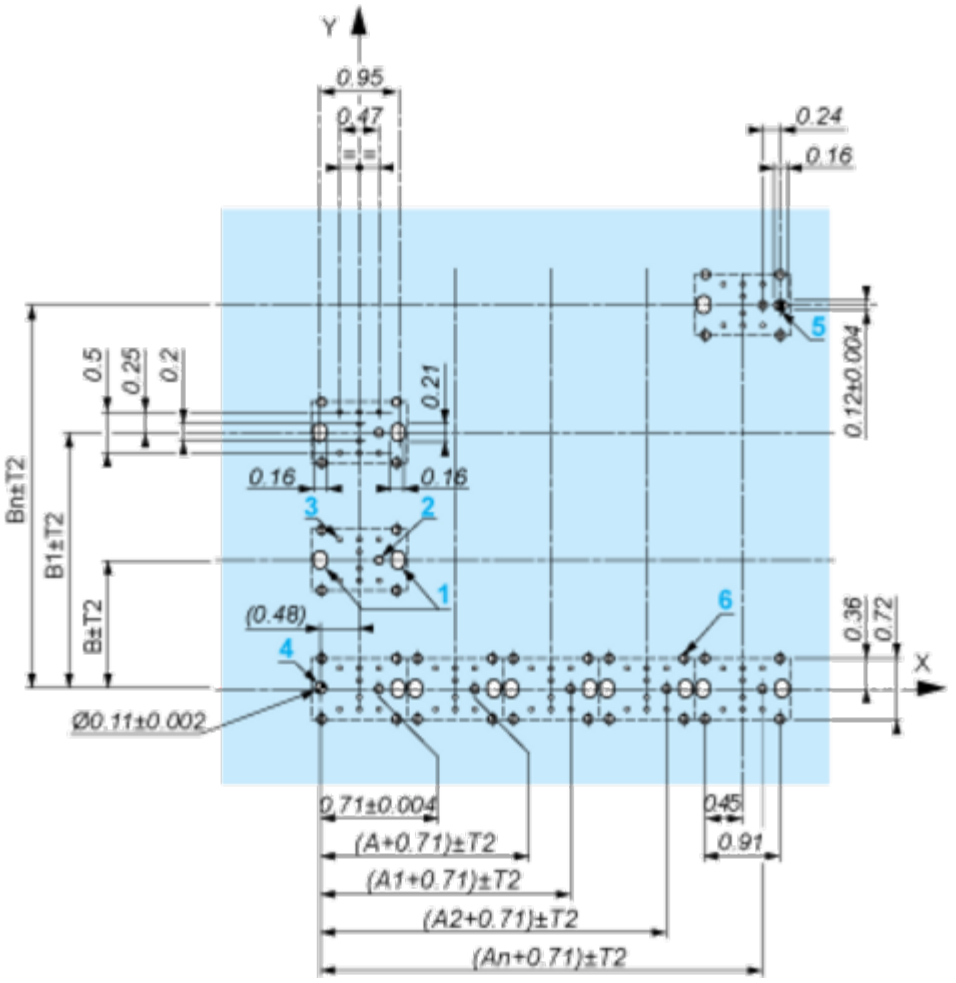

A: 1.18 in. min.
B: 1.57 in. min.

General Tolerances of the Panel and Printed Circuit Board

The cumulative tolerance must not exceed 0.3 mm / 0.012 in.: T1 + T2 = 0.3 mm max.

Installation Precautions

- Minimum thickness of circuit board: 1.6 mm / 0.06 in.
- Cut-out diameter: 22.4 mm ± 0.1 / 0.88 in. ± 0.004
- Orientation of body/fixing collar ZB5AZ009: ± 2°30' (excluding cut-outs marked **a** and **b**).
- Tightening torque of screws ZBZ006: 0.6 N.m (5.3 lbf.in) max.
- Allow for one ZB5AZ079 fixing collar/pillar and its fixing screws:
  - every 90 mm / 3.54 in. horizontally (X), and 120 mm / 4.72 in. vertically (Y).
  - with each selector switch head (ZB5AD•, ZB5AJ•, ZB5AG•).

The fixing centers marked **a** and **b** are diagonally opposed and must align with those marked **4** and **5**.

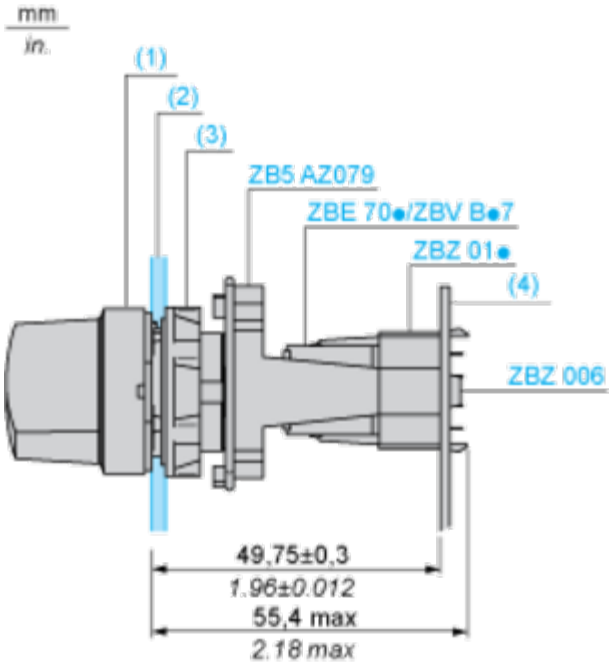

(1) Head ZB5AD•
(2) Panel
(2) Nut
(4) Printed circuit board

Mounting of Adapter (Socket) ZBZ01•

- **1** 2 elongated holes for ZBZ006 screw access
- **2** 1 hole Ø 2.4 mm ± 0.05 / 0.09 in. ± 0.002 for centring adapter ZBZ01•
- **3** 8 × Ø 1.2 mm / 0.05 in. holes
- **4** 1 hole Ø 2.9 mm ± 0.05 / 0.11 in. ± 0.002, for aligning the printed circuit board (with cut-out marked **a**)
- **5** 1 elongated hole for aligning the printed circuit board (with cut-out marked **b**)
- **6** 4 holes Ø 2.4 mm / 0.09 in. for clipping in adapter ZBZ01•

Dimensions An + 18.1 relate to the Ø 2.4 mm ± 0.05 / 0.09 in. ± 0.002 holes for centring adapter ZBZ01•.

Technical Description

Electrical Composition Corresponding to Codes M1 and M7

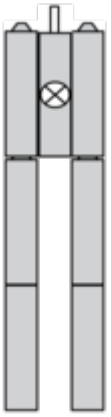

Electrical Composition Corresponding to Codes M2 and M8

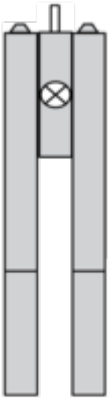

Electrical Composition Corresponding to Codes M6 and P2

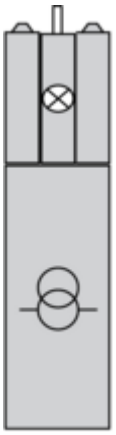

Electrical Composition Corresponding to Codes M5, M10, MF1, MR1 and MF2

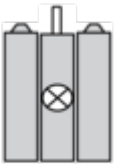

Legend

Single contact

Double contact

Light block

Possible location